AK3 Series Temperature controller

Operation Manual V1.1

Thank you for using Winpark AK3 series temperature controller. Concentrate on studies in this product. With a computer chip as master control unit, this series product adapts multiple digital filter circuit; interference with the automatic recovery and the self-tuning PID control function. This product has the advantage of high measuring precision, strong anti-interference ability, suitable for drying equipment, drying oven, laboratory equipment, heating and cooling temperature range between -199 ℃ ~999 ℃. Simple operation , easy operation, and low cost.

☐ Technical Specification

Rated Voltage	AC180V～240V，50Hz； AC85～265V；（optional）
Power Consumption	≤5VA
Working Environment	Ambient Temperature 0℃-50℃ Relative Humidity 35%-85% RH（no condensation）
Storage Temperature	-25℃～65℃（avoid ice or dew）
Resolution	1℃，0.1℃ (adjustable)
Accuracy	±0.5%FS
Relay Output	Relay Contacts AC220V/DC30V 3A
Logic Level output	ON: DC12V；OFF: below DC0.5V；Max current: 30mA，Load Resistance≥1K

☐Model Selection

AK3 - ☐ ☐ ☐ ☐ ☐ ☐ -Cxxx
① ② ③ ④ ⑤ ⑥ ⑦

① **Panel Size**
A：48*48 B：48*96 D:72*72

② **Input Signal**
K:K,E,J P:PT100,CU50

③ **Power Supply**
L：Linear Power Supply S：Switch Power Supply

④ **Main Output**
1：Relay 2：Logic Level

⑤ **Alarm Output**
0：no alarm 1：relay alarm 2：logic level alarm
3：buzzer alarm

⑥ **Strengthened Function**
0：no strengthened function

⑦ **Funcion Code**
For customized product only

*Note: AK3-B/AK3-D with PT100 or CU50 sensor, not support NO/NC. If model with K、E、J sensor，NO/NC is optional

☐ Outer dimension and install hole size

Unit：mm

Model	Panel Size	Case Size LxWxH	Install Hole Size
AK6-A	48x48	76x45x45	46x46
AK6-B	48x96	72x44x90	45x91
AK6-D	72x72	72x66x66	67x67

☐ Wiring

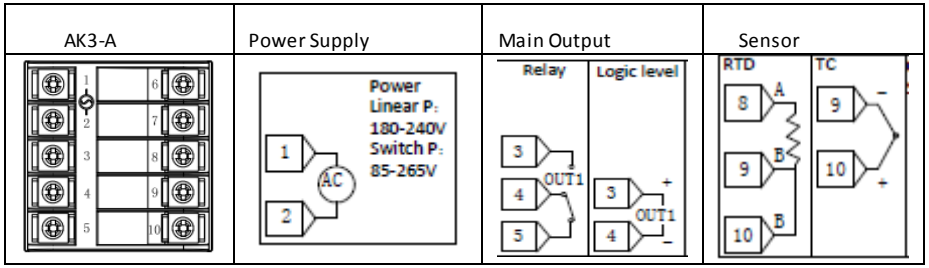

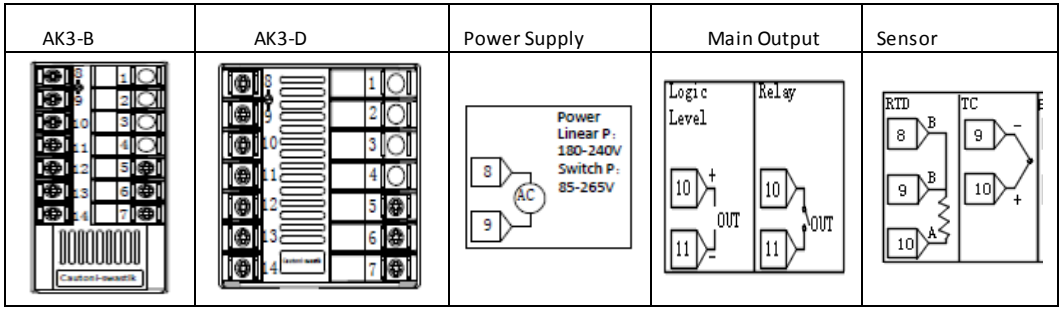

☐Operation Panel Explanation

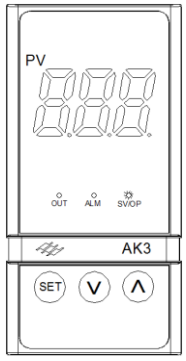

PV: Display measure value

OUT: Heat Indicator

ALM: Alarm Indicator

SV/OP: Enter temperature setting, light on. Display PV value if light not on.

SET: Press for 4sec, enter or exit menu. Press once to change or save parameter

V: Value minus, Menu/ Parameters shift

Λ: Value plus, Menu/ Parameters shift

***Note: If SV/OP light not on, display should be initial interface**

☐Menu Display ExplanatioN

Code	Menu Function	Default	Upper Limit	Lower Limit	Explanation
P 0	Data Lock	0	200	0	P0=0, check menu; P0=1, change P0=110 default to factory setting， P0=188,start AT
P11	Set SV				SV, able to be modified
P12	Accuracy	0	1	0	P12=0 no decimal point，P12=1 decimal point available
P13	Temperature Compensation	0	999	-199	To modify temperature affected by sensor position or other problem
P16	Input Sensor	0	2	0	Please refer to Sensor Input
P17	ALM1 mode	1	24	0	Please refer to ALM Mode Define
P18	Upper Limit of ALM1	10	999	-199	
P19	Lower Limit of ALM1	0	999	-199	
P22	ALM2 mode	0	24	0	
P23	Upper Limit of ALM2	0	999	-199	
P24	Lower Limit of ALM2	0	999	-199	
P67	Control Mode	0	3	0	0：heat PID 1：cool PID 2：ALM2 output and return difference alarm 3：ALM1 or ALM2 output
P76	Heat Parameter P	100	999	1	Proportional Band of Heat
P77	Heat Parameter I	240	999	0	Integral Time of heat (Time for next adjustment)
P78	Heat Parameter D	60	999	0	Derivative time of heat (Time for advance adjustment)
P79	Advance Control Value	50	100	1	Start Control in Advance, Unit: 0.1℃
P80	Heat Cycle HT	20	100	1	Default: Relay 20sec, Logic Level 3sec.

☐Sensor Input

	Sensor Input	Set Code	Sensor type	Temperature Range
P16	K	0	K	-200℃~999℃
		1	E	-200℃~650℃
		2	J	-200℃~850℃
	P	0	PT100	-200℃~850℃
		1	CU50	-50℃~150℃

☐ALM Mode Define

P17/P22 Code	Alarm Name	Alarm output condition
0	No alarm	No alarm output
1	Deviation upper limit	when PV>SV+P18
2	Deviation lower limit	when PV<SV-P19
3	Deviation upper & lower limit	when PV>SV+P18 or PV<SV-P19
4	Deviation upper & lower limit range	when PV<SV+P18 and PV>SV-P19
5	Deviation upper limit(keeping)	when PV>SV+P18
6	Deviation lower limit(keeping)	when PV<SV-P19
7	Deviation upper & lower limit(keeping)	when PV>SV+P18 or PV<SV-P19
8	Deviation upper & lower limit range(keeping)	when PV<SV+P18 and PV>SV-P19
9	absolute value upper limit	when PV> P18
10	absolute value lower limit	when PV<P19
11	absolute value upper & lower limit	when PV>P18 or PV<P19
12	absolute value upper & lower limit range	when PV<P18 and PV>P19
13	absolute value upper limit(keeping)	when PV> P18
14	absolute value lower limit(keeping)	when PV<P19
15	absolute value upper & lower limit(keeping)	when PV>P18 or PV<P19
16	absolute value upper & lower limit Range (keeping)	when PV<P18 and PV>P19
17	Upper limit with return difference	when PV>SV+P18 alarm on, till PV<SV-P19 alarm off
18	lower limit with return difference	when PV<SV-P19 alarm on，till PV>SV+P18alarm off
19	absolute value upper limit with return difference	when PV> P18 alarm on, till PV< P19 alarm off
20	absolute value lower limit with return difference	when PV< P19alarm on, till PV> P18 alarm off
21	Upper limit with return difference (keeping)	when PV>SV+P18alarm on,till PV<SV-P19alarm off
22	lower limit with return difference (keeping)	when PV<SV-P19 alarm on,till PV>SV+P18alarm off
23	absolute value upper limit with return difference (keeping)	when PV> P18alarm on，till PV< P19alarm off
24	absolute value lower limit with return difference (keeping)	when PV< P19 alarm on，till PV> P18 alarm off

ALARM KEEPING definition: after powering on the controller, PV should go out of the alarm range first, and when it goes back to the alarm range again, the alarm output would only be ON for the first time.

☐Error Code Table

Display	Code Define	Trouble Shooting	Remark
ER.1	Temperature Range Error	Check if TC is disconnected	PV blinking
ER.2	RTD Disconnected	Check if RTD is disconnected	
ER.4	Working Environment out of range	Check sensor wiring	