Changzhou Winpark Electronics Co., Ltd
Add: 5th Floor of Tianan Industrial Village A plus, Xinbei, Changzhou 213022, China
Tel: 0086-519-89801552 Email: allen@cnwinpark.com
Fax: 0086-519-85108252 Web: www.cnwinpark.com

SAP Programmable Logic Controller(PLC) Operation Manual

Thank you for using Winpark products. Please read this manual carefully before operating the controller and always keep it around you to make it available easily anytime.

WARNING

Wire connection

If failure or error of this instrument could result in a critical accident of the system, install an external protection circuit to prevent such an accident.
Choose fuse protection power supply wire and output wire to avoid strong current strike which may cause failure or damage to the controller.

Power supply

Please use the controller under rated power supply to avoid causing failure or damage to the controller.
Don't turn on thee power supply until all of the wiring is completed and checked again

Using sites limitation

Don't use this controller in the places subject to flammable or explosive gas to avoid cause fire.
Don't use this controller in dusty, corrosive and steam exhaust environment
Don't use this controller where there are strong shock and strike.

□ Technical Data

Rated voltage	24VDC(-15% ～ 20%)	Power Consumption	≤5VA
Insulation Strength	Power supply – input-output：1500V AC 1min Power supply - RS485：800V AC 1min Input - RS485：1500V AC 1min Output group 0- Output group 1: 1500V AC 1min	Insulation Resistance	Power supply – input - output：> 20MΩ Power supply - RS485：> 20MΩ Input - RS485 : > 20MΩ Output group 0- Output group 1: > 20MΩ
Working environment	Temperature0°C ~50°C, RH: 35%~85%(no condense)	Anti noise	1800V 1uS pulse 10min
		Permissible instantaneous power failure	Less than 20ms
Program method	Ladder	Connection methods	Terminals
Input port	8 points isolated logic input	Program writing method	RS485 Port (writing when power on the PLC)
Output port	8 points relay output	Software download	http://www.cnwinpark.com

□ Output ports specification

Output type	DC / AC
Output method	Relay
Output current	1.5A/point (5A/COM)
Output spec	Below 250V AC, 30V DC
Max Load	75W(Inductive) /90W(Resistor)
Response time	About 10mS

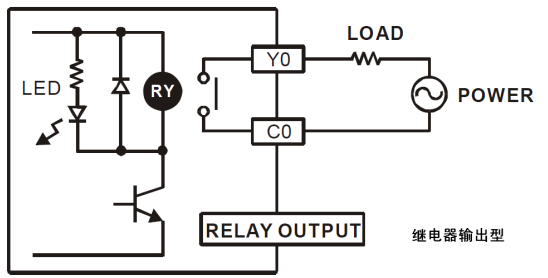

□ Input ports specification

Input method	DC(COM port is anode)
Input current	5mA (24VDC)
OFF → ON	COM=24V, Y lower than 14VDC, (voltage difference>10V)
ON → OFF	COM=24V, Y higher than 22VDC, (voltage difference<2V)
Response time	5ms (adjustable)

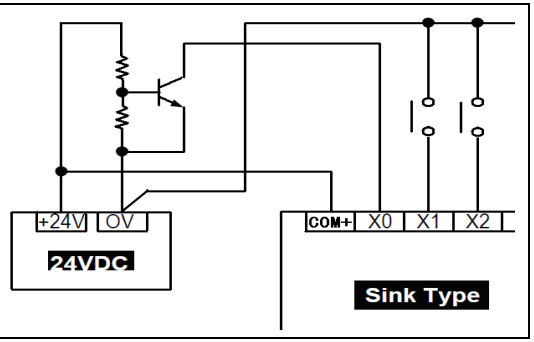

□ Product Model:

SAP □ - □ M □ □ - □

(1) (2) (3) (4) (5) (6)

S/N	Name	Description
1.	Product code	WINPARK SAP series PLC
2.	Hardware version	201
3.	Input points	8: 8 points input
4.	Output points	8: 8 points output
5.	Output type	TD：transistor open drain output (negative valid) TS: transistor open source output (positive valid) R：relay output TR：transistor/relay mixed output
6.	Power supply type	D：24V DC power supply A：220V AC power supply

□ Internal parameter explanation

1.Register

NO	Name	Range	Explanation	Remark
1	General register	D0-D4096	All internal registers coincide with this(Remark)	
2	Special register	D8000-D8255	D8000 coincides with D(4096—256),so on and so forth.	
3	Timer	T0-C255	T0 coincides with D3528, so on and so forth.	This is register
4	Counter	C0-C255	C0 coincides with D3271，Since C200, it is 32-bit counter.32-bit counter occupies two D register	This is register
5	Indirect addressing	V0-V7,Z0-Z7	8 points separately. Only MOV could indirect address.Z0 coincides with D8180.	

Remark:

All other internal parameter coincide with D0-D4096,the address could be find and operated D directly.

D0-D639 are multi function register, they coincide with coils(see coil chart)

D1000-D3270 are general register. They won't be stored when power off.

D3271-D3839：are valaue for timer and counter.

2.Coil

No.	Name	Range	Explanation	Remark
1	Input point	X0-X317	The 0 bit of X0 and D0 coincide	
2	Output point	Y0-Y317	The 0 bit of D16 coincide with Y0	
3	Timer	T0-T255	The 0 bit of D32 coincide with coil T0	This is coil
4	Counter	C0-C255	The 0 bit of D48 coincide with coil C0	This is coil
5	Status mark	S0-S1023	The 0 bit of D64 coincide with S0	
6	Auxiliary relay	M0-M8191	The 0 bit of D128 coincide with M0; No difference for M8000	

3. power off storage area

No.	Name	Range	Explanation	Remark
1	General register	D640-D999	Totally 340 registers	
2	Cumulative timer	T246-T255	Totally 10 registers and 10 coils	
3	16-bit counter	C170-C199	Totally 30 registers and 30 coils	
4	32-bit counter	C246-C255	Totally 10 (occupy 20 registers) and 10 coils	
5	Status mark	S512-S1023	Totally 512 coils	
6	Auxiliary relay	M512-M1023	Totally 512 coils	

Remark: All the saved data would be stored after power off. There is no limitation for data modification in program.

4. timer and counter setting

NO	Name	Range	Explanation	Remark
1	timer	T0-T199	100ms timer	
2	timer	T200-T255	10ms timer	
3	counter	C0-C199	16-bit counter	
4	counter	C200-C255	32-bit reversible counter, direction is controlled by special coil (M8100-M8155)	reversible counter

5. Instruction supported

No.	Name	Instruction	Remark
1	Sequence instructions	LD, AND, OR	include Pulse instruction
2	Sequence instructions	ANB, ORB, MPS, MRD, MPP, MC, MCR, INV, PLS, PLF, MEP, MEF, SET, RST, END, OUT, STL, RET, P	
3	Function instructions	CJ, CALL, SRET, FEND, FOR, NEXT, CMP, ZCP, MOV, CML, BMOV, FMOV, XCH, ADD, SUB, MUL, DIV,INC, DEC, WAND, WOR, WXOR, ROR, ROL, ZRST, REF, PLSR,PLSY, ALT, SWAP, TCMP, TZCP, TADD, TSUB, TRD, TWR, RS, RS2	include PULSE and 32bit instruction
4	Function instructions	LD=,>,<,<>,<=,>= AND=,>,<,<>,<=,>= OR=,>,<,<>,<=,>=	include 32bit instruction

Remark: only MOV and calculation instruction (ADD,SUB,MUL,DIV,INC,DEC) support indirect addressing(V/Z)

□ Appearance and Wiring explanation

(Size: 90mm * 80mm * 35mm , the width of installation slot 35.5mm,length unit in the chart is mm)

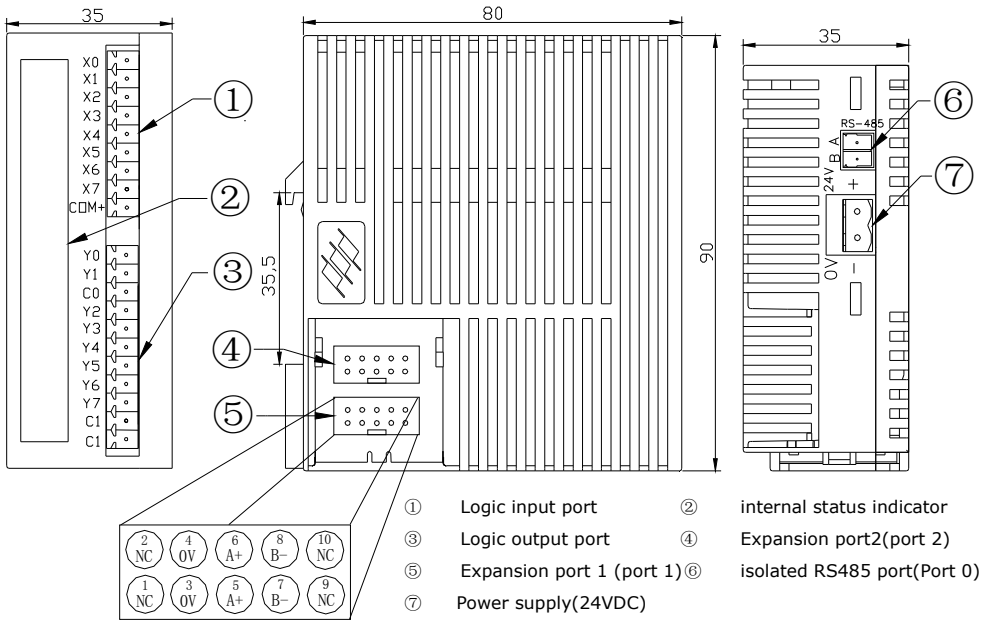

① Logic input port ② internal status indicator

③ Logic output port ④ Expansion port2(port 2)

⑤ Expansion port 1 (port 1) ⑥ isolated RS485 port(Port 0)

⑦ Power supply(24VDC)

Remark: 1. Expansion port uses both two pins, the pins with the same function are connected inside the plc.

2. There are two groups of common ports for output: one C0 and two C1, they are electric insulated.

3. The common port for Y0 and Y1 is C0; the common port for Y2~Y7 is C1;