WINPARK
汇 邦

TR series Trigger Module

Thanks for using Winpark TR series trigger module. TR series is an economical trigger module developed by Winpark. It uses microcomputer chip as control center and possesses function like multi-digital filter circuit and automatic recovery.

- Support several mode of analog input (0-5V, 0-10V, 0-20mA, 4-20mA)
- Support several mode of output (Star, triangle wiring)
- No external sync line required
- Three-phase star type wire with midline will automatic recognize single-phase, two-phase and three-phase output
- Strong anti-interference function and pass 1800V common-mode and differential-mode ground experiment
- Stop-Phase detection
- Combine trigger mode of pulse and optocoupler
- Support power, current limit
- Support soft start

Address：5th floor, Tian'an Industry Village A+, Xinbei District, Changzhou, Jiangsu Province, China
Hotline：+86-0519-85132277
Fax：+86-0519-85108252
Website：http://en.cnwinpark.com/

□ Technical Specification

Rated Voltage	AC180V～240V，50Hz； AC85～265V；
Input Signal	0～5V、1～5V、0～10V、0～10mA、0～20mA、4～20mA
Phase-Shift Range	≤175 degree
Trigger Mode	Strong Trigger<1000A SCR; Weak Trigger<500A SCR
Ambient Temperature	0℃～50℃

□Single-Phase Trigger/ Model selection

TRK1 - □ - □□□□
① ②③④⑤

SN	Name	Explanation
①	Installation Method	A:Rail Mounting B:Panel Mounting
②	Input Signal	0:0-20mA 1:0-10mA 2:4-20mA 3:0-5V 4:0-10V 5:1-5V
③	Control Method	0：Zero-Cross Output（Resistive Load） 1：Phase-Shift Output（Resistive Load） 2：Phase-Shift Output（Inductive Load）
④	External Potentiometer	0：Not Support 1：Support
⑤	Display Method	0：No Display 1：Display

□Three-Phase Trigger/ Model Selection

TRK3 - □ - □□□□
① ②③④⑤

SN	Name	Explanation
①	Installation Method	A:Rail Mounting B:Panel Mounting
②	Input Signal	0:0-20mA 1:0-10mA 2:4-20mA 3:0-5V 4:0-10V 5:1-5V
③	Control Method	0：Three-Phase Phase-Shift（without midline） 1: Three-Phase Zero-Cross（without midline） 2：Three-Phase Phase-Shift（with midline） 3: Three-Phase Zero-Cross（with midline） 4：Three-Phase Half-Control Phase-Shift（without midline） 5：Three-Phase Half-Control Zero-Cross（without midline）
④	External Potentiometer	0：Not Support 1：Support
⑤	Display Method	0：No Display 1：Display

□ Operation Instruction

After temperature controller wire properly and output normally, output indicator light blinking speed will change with output value changed. LED display 0-100percentage convert from Input Value.

□ Installation Dimensions

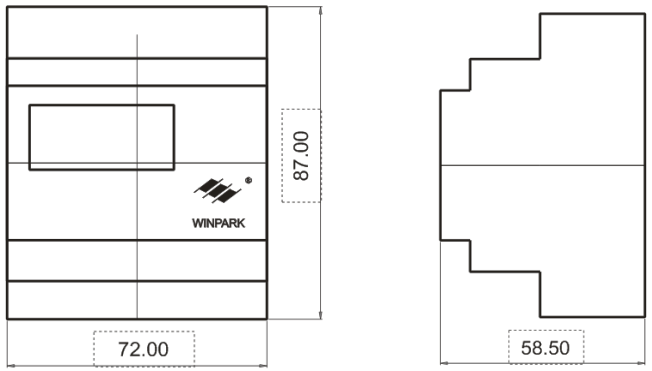

□ Reference Wiring

AC power cable access to L,N（forbid 380v wiring）, analog input signal positive access to IN+, negative access to IN-.

Single-Phase

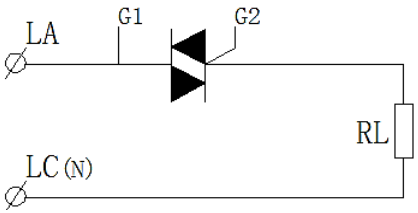

Control Two-Way SCR

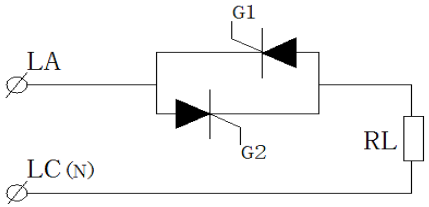

Control Single-Way SCR（Anti-Parallel）

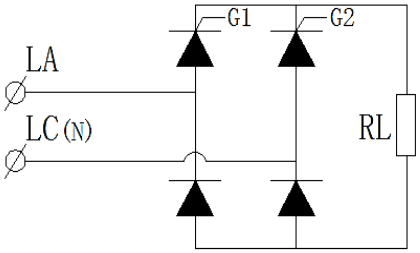

Control Single-Phase Semi-Controlled

Three-Phase

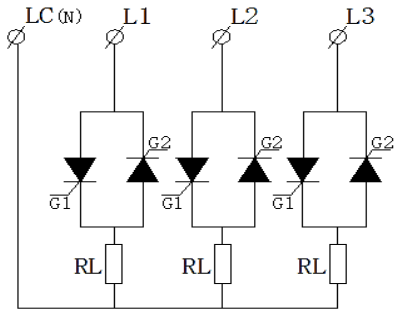

Control Single-Way SCR（Anti-Parallel）
Three-Phase Trigger（with midline）

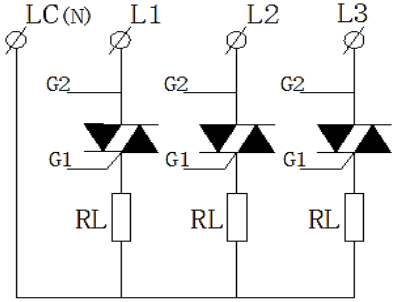

Control Two-Way SCR
Three-Phase Trigger（with midline）

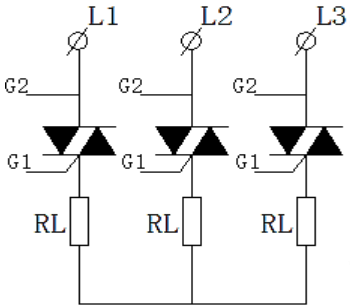

Control Two-Way SCR
Three-Phase Trigger

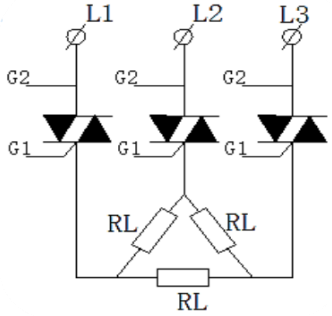

Control Two-Way SCR
Three-Phase Triangle

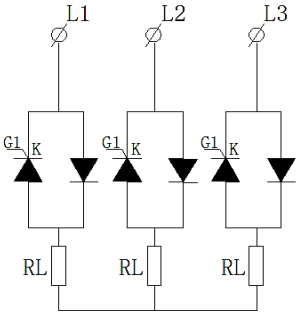

Half-Wave Control
Three-Phase

□ Display Menu

F000	Use ∧ or ∨ button to adjust output value
L000	Limit minimum output value, default=0
F 100	Limit Maximum output value, default=100
t -00	Soft Start time， output value increased every 0.1s*t time
P - -0	Switch output mode, 0： Three-Phase without midline 1： Three-Phase with midline
LCK0	Data Lock, highest authority code=8